MOST Guide Star Photometry

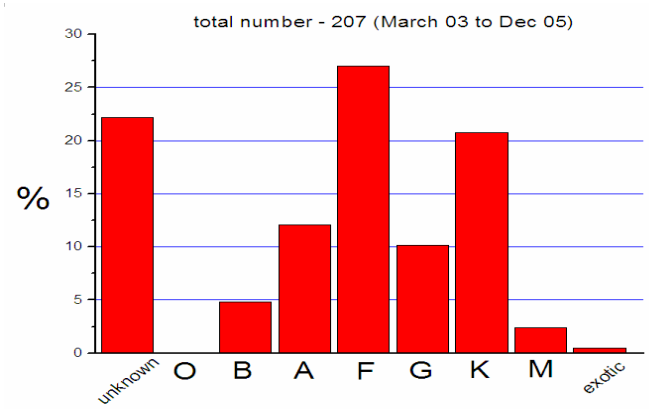

Overview, Statistical Analysis

by

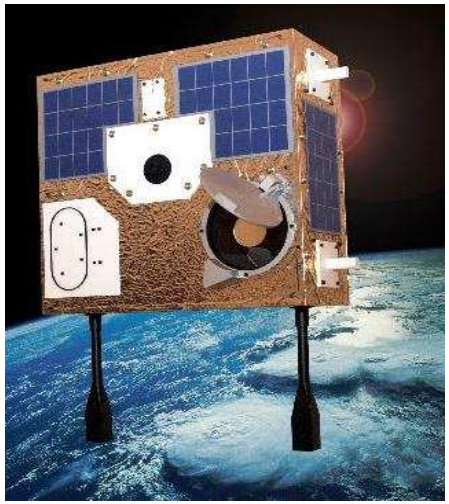

Rainer Kuschnig & the MOST Team

MOST Photometry Sources

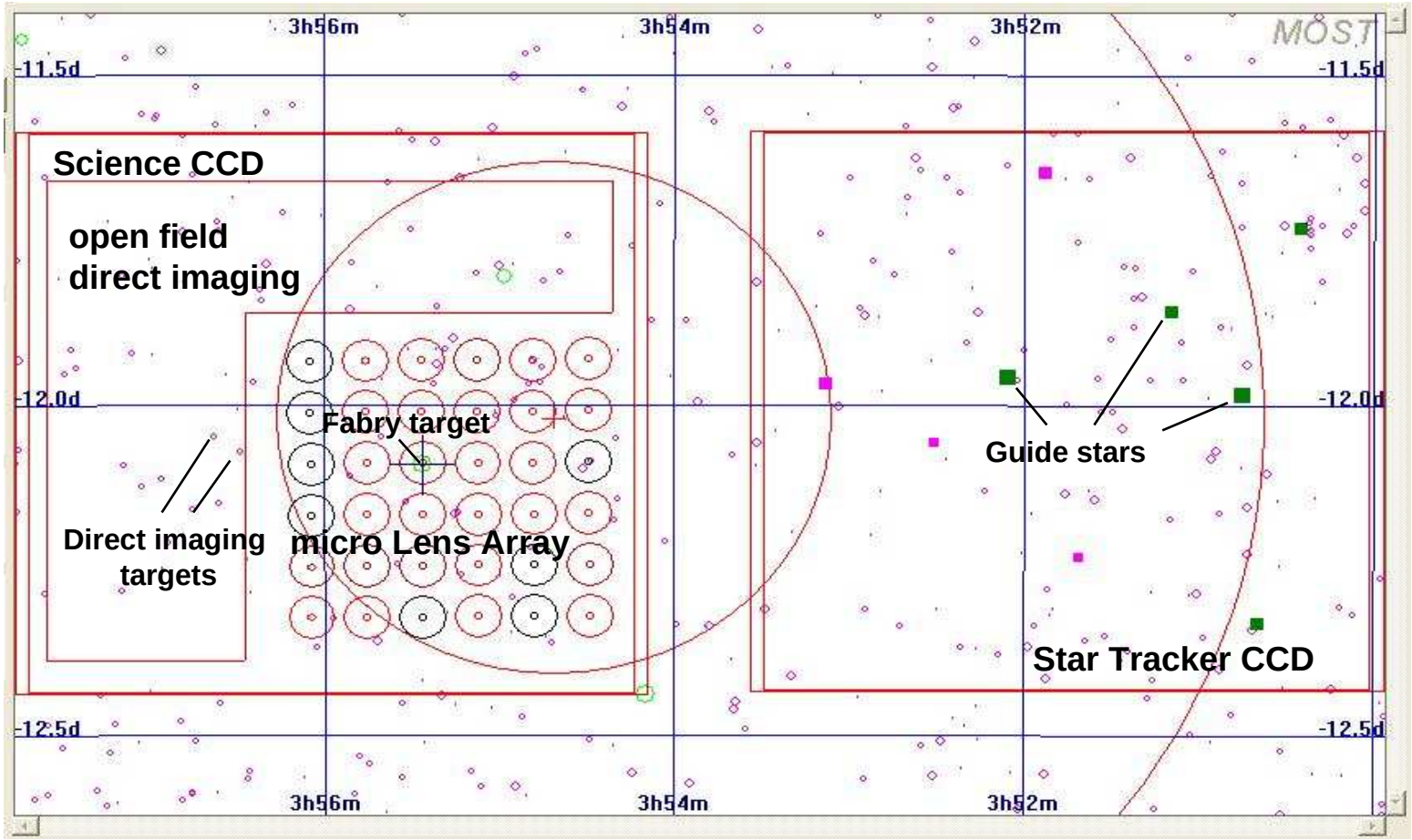

MOST Guide Star Photometry

- up to 20 guide stars per field
- the magnitude range 6.5-11
- exposure time is 1.5 sec
- no images are recovered
- brightest guide stars -> 30ppm

MOST Guide Star Photometry

1.5 sec exposure

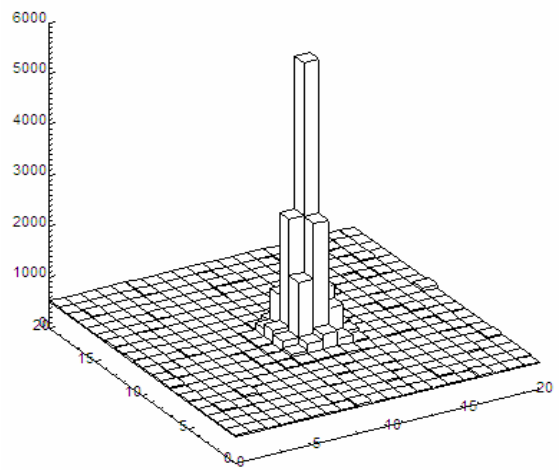

calculate background

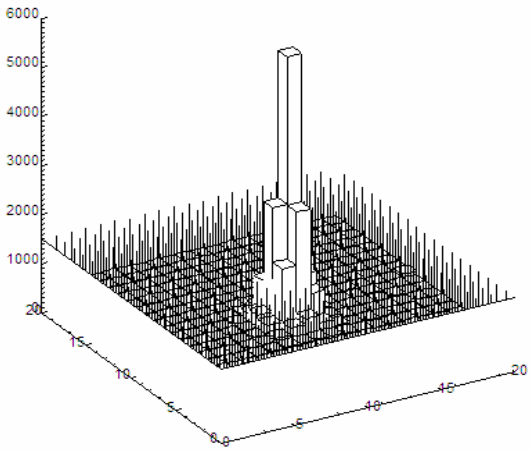

apply threshold

$$Sig_{exp} = \Sigma\,(Ipix > backgr+threshold)$$

$$Sig_{tot} = \Sigma\, N*Sig_{exp}$$ ***-> stored in the science data stream***

N = integer (target sampling time / guide Star exposure Time)

MOST Guide Stars – Performance

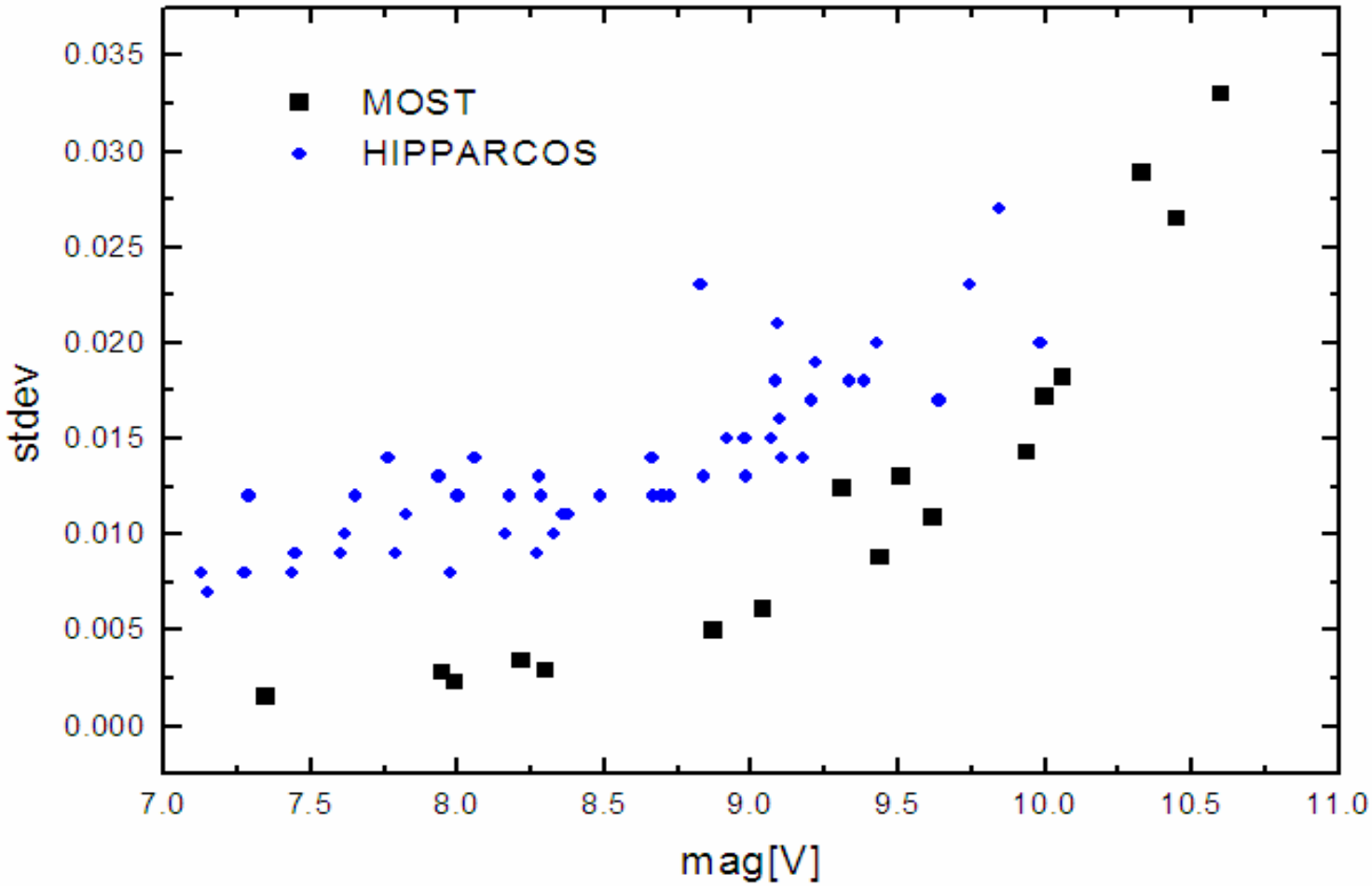

MOST Guide Stars – NOISE

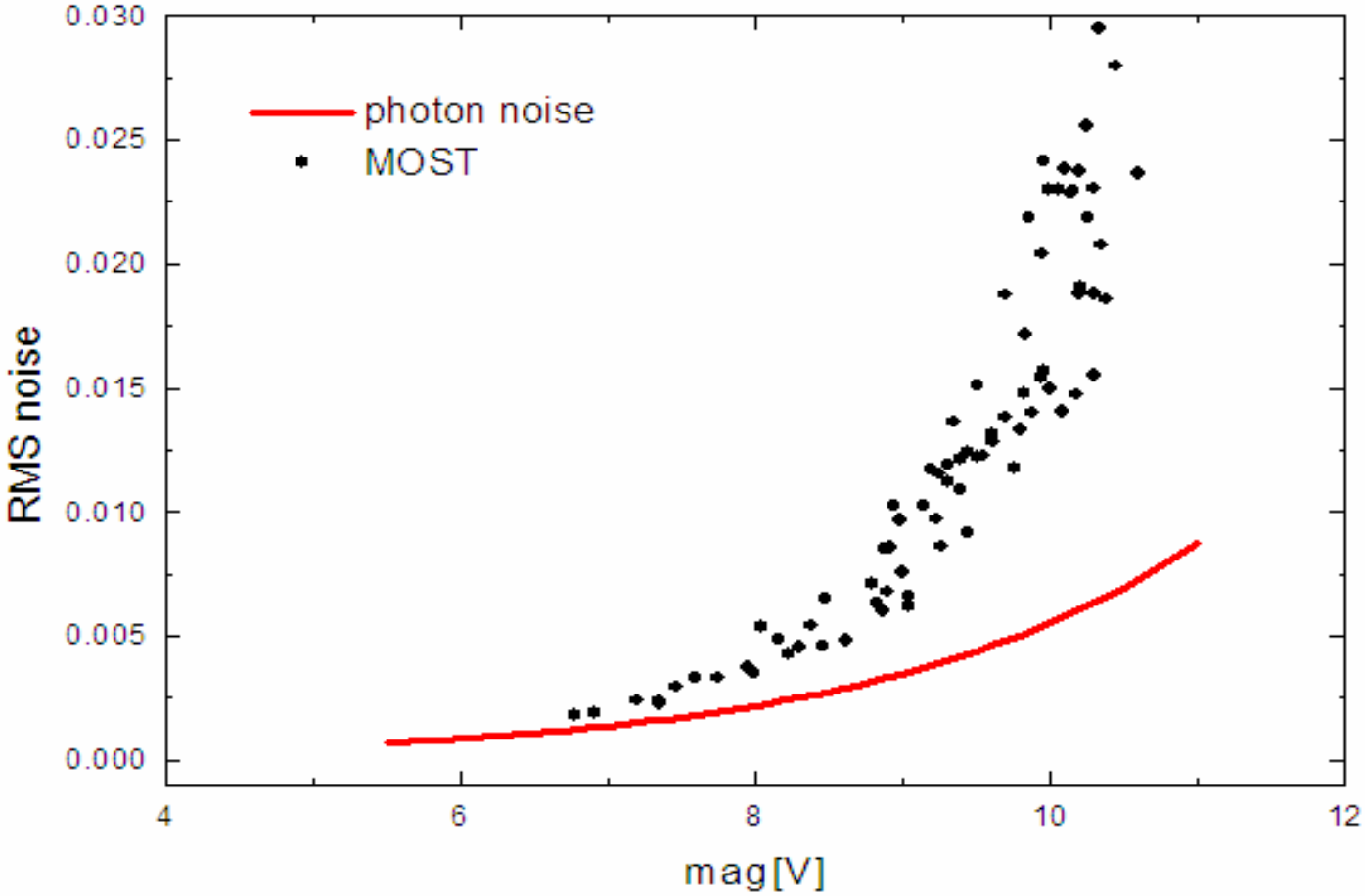

MOST Guide Stars - Stats

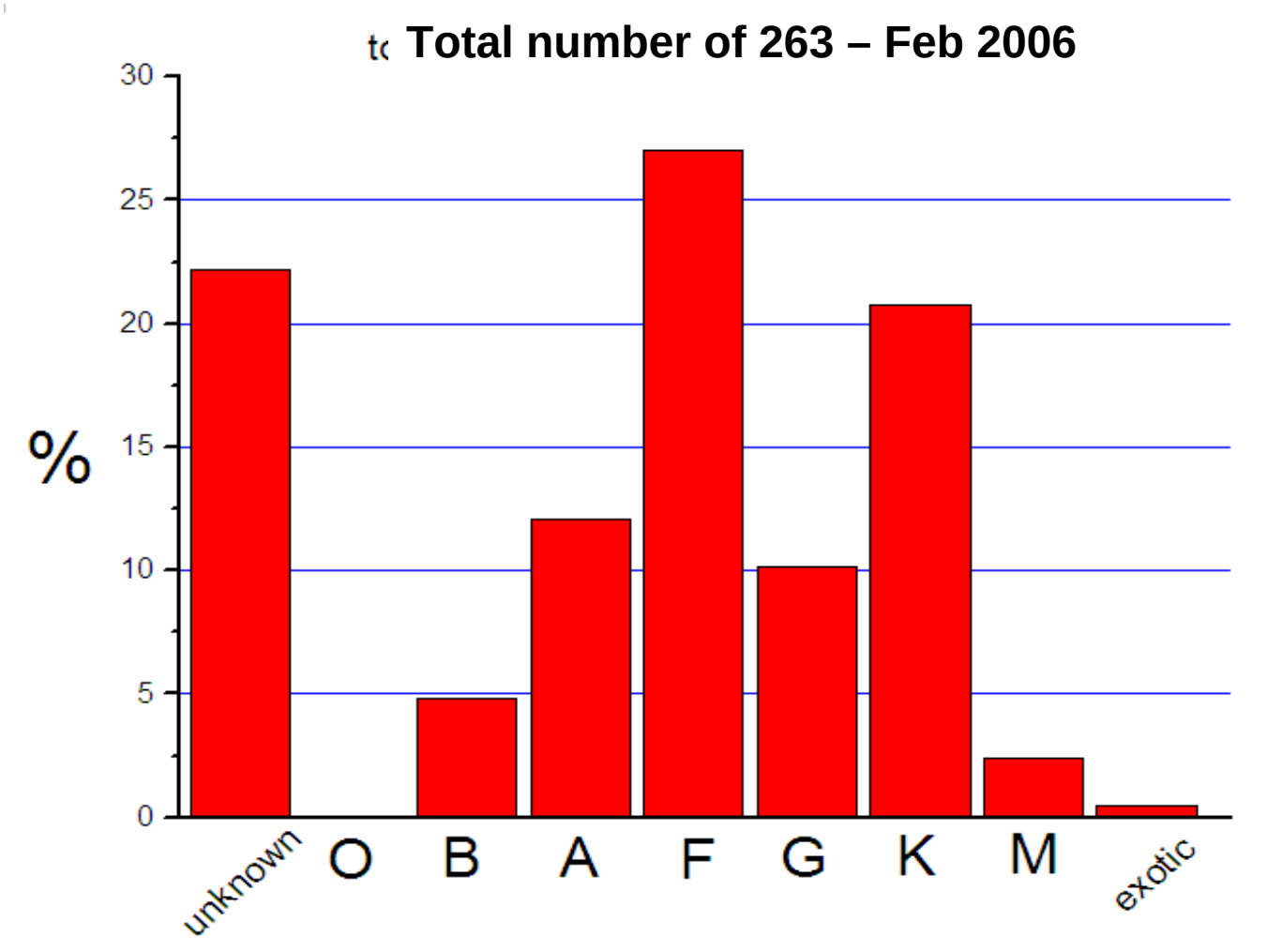

time base:
7 to 47 days

MOST Guide Stars – Locations

- typically field stars
- clusters: NGC2264,NGC2244
- dense fields: WR123,WR103

MOST Guide Stars – NGC2264

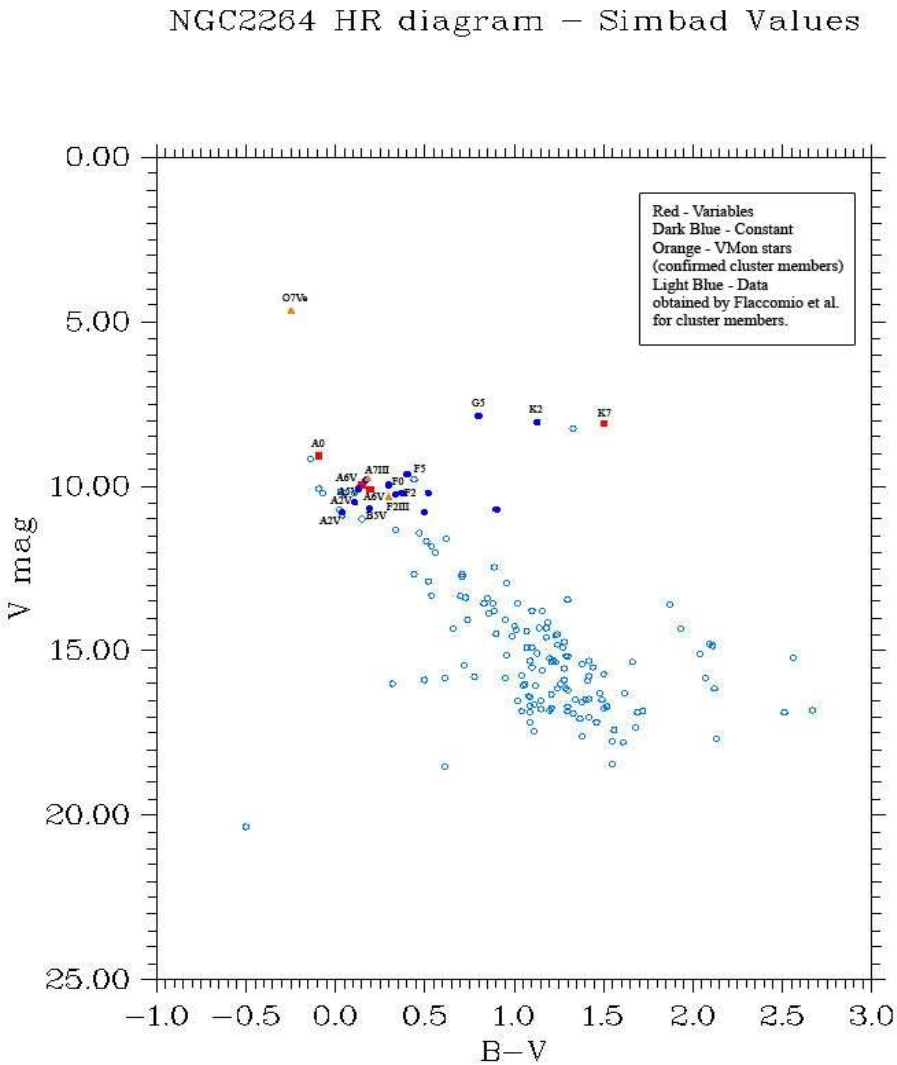

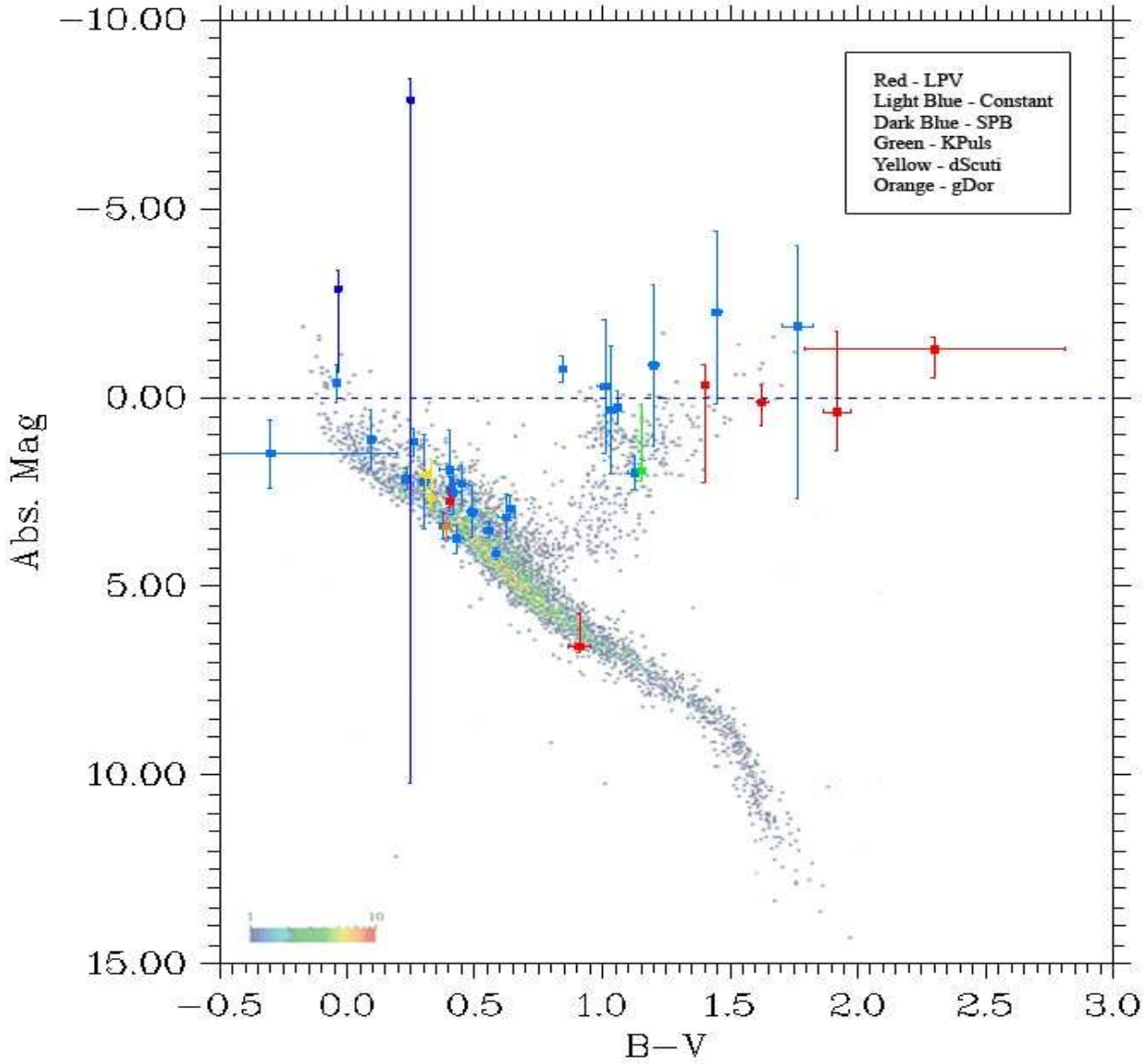
Red - LPV
Light Blue - Constant
Dark Blue - SPB
Green - KPuls
Yellow - dScuti
Orange - gDor
Abs. Mag
B−V
−10.00
−5.00
0.00
5.00
10.00
15.00
−0.5
0.0
0.5
1.0
1.5
2.0
2.5
3.0

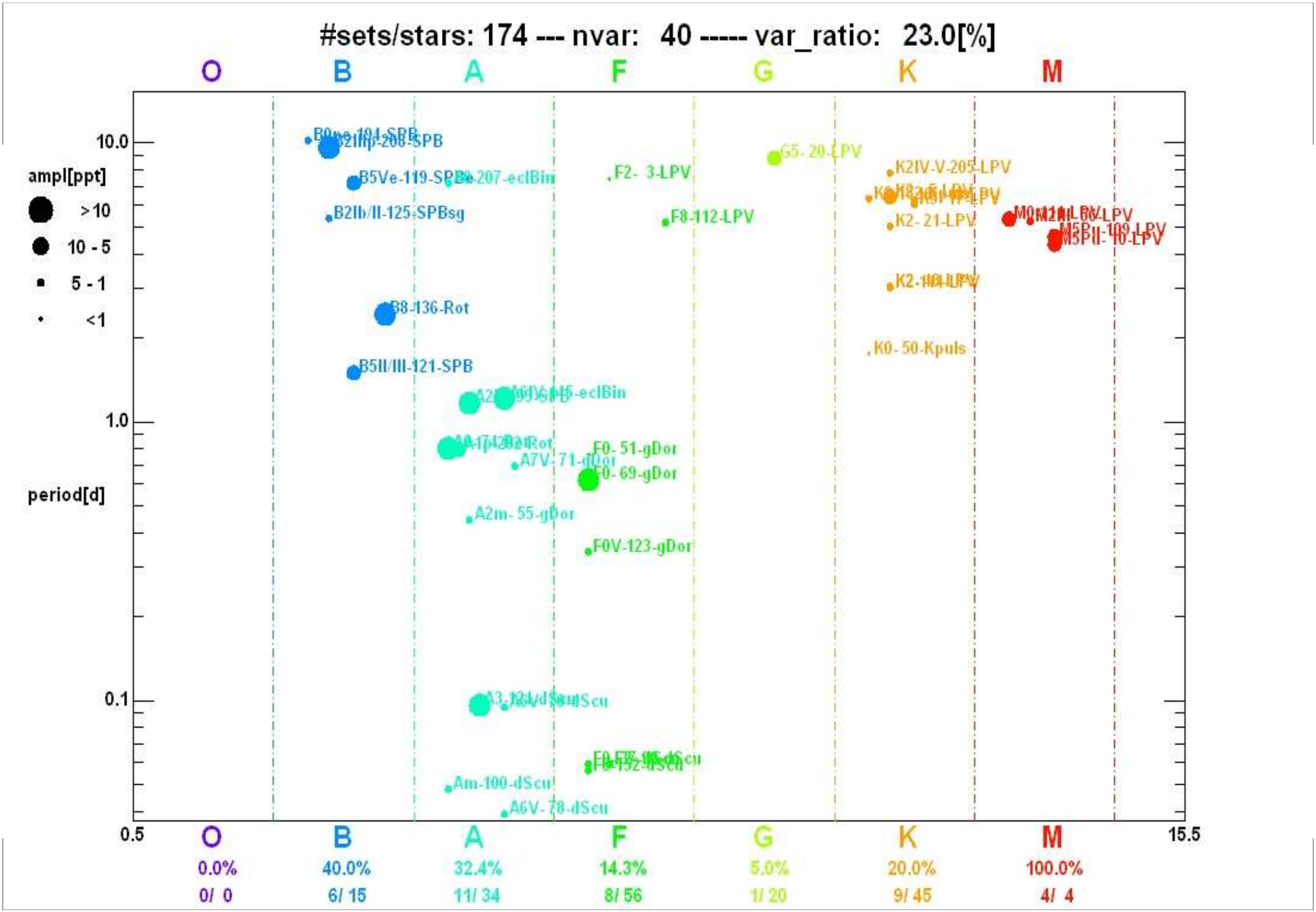
#sets/stars: 174 --- nvar: 40 ----- var_ratio: 23.0[%]
O
B
A
F
G
K
M
ampl[ppt]
>10
10 - 5
5 - 1
<1
period[d]
10.0
1.0
0.1
0.5
15.5
B5Ve-119-SPB
B2Ib/II-125-SPBsg
B8-136-Rot
B5II/III-121-SPB
F2- 3-LPV
F8-112-LPV
G5- 20-LPV
K2IV-V-205-LPV
K2- 21-LPV
K0- 50-Kpuls
F0- 51-gDor
F0- 69-gDor
A2m- 55-gDor
F0V-123-gDor
Am-100-dScu
A6V- 78-dScu
0.0%
0/ 0
40.0%
6/ 15
32.4%
11/ 34
14.3%
8/ 56
5.0%
1/ 20
20.0%
9/ 45
100.0%
4/ 4

MOST Guide Stars – Variables

- 3 eclipsing binaries
- 3 gam Dor
- 2 K puls
- 3 rotational variables
- 7 SPB(e,sg,classical)
- 12 LPVs
- 10 del Scuti

~15 to be finally classified

…….. to be continued ……